# PP350/PP351/PP450/PP451 Mount

## PARAPET, WALL/ROOFTOP MOUNT, SPECTRA®, DF5, AND DF8 DOMES

## Product Features

- Easy to Install
- Aluminum Construction
- Maximum Load 45 Pounds (20.41 kg)
- For Use with Small and Medium Outdoor Pendant Mount Domes that Use 1.5-Inch NPT Pipe (Including Spectra®, DF5, and DF8 Series)
- PP350/PP450 Mounts to Inside or Outside of Parapet Wall; PP351/PP451 Mounts to Rooftop or Smooth Horizontal Surface
- Swivels for Easy Installation and Access to Dome
- Removable End Cap for Easy Access to Wiring

**PP350 PARAPET WALL MOUNT**

The **PP350** and **PP351** mounts were designed for outdoor use with small-size pendant domes (such as Spectra and DF5 Series), and the **PP450** and **PP451** are for outdoor use with medium-size pendant domes (such as DF8 Series). The **PP350** and **PP450** models mount to parapets, while the **PP351** and **PP451** models mount to rooftops or other smooth horizontal surfaces. All models accommodate domes that use 1.5-inch NPT pipe.

The **PP450** and **PP451** can be used in applications where mounting and height clearances of models **PP350** and **PP351** are inadequate. Models **PP450** and **PP451** are higher by 9.72 inches (24.69 cm) and the overhang is increased by 14.77 inches (37.52 cm).

The mounts are designed to swivel within available clearance limits, which adds to the flexibility, easy maintenance, and usability of the configuration.

Manufactured from aluminum, the mounts include indexing bolts to secure the arm in position.

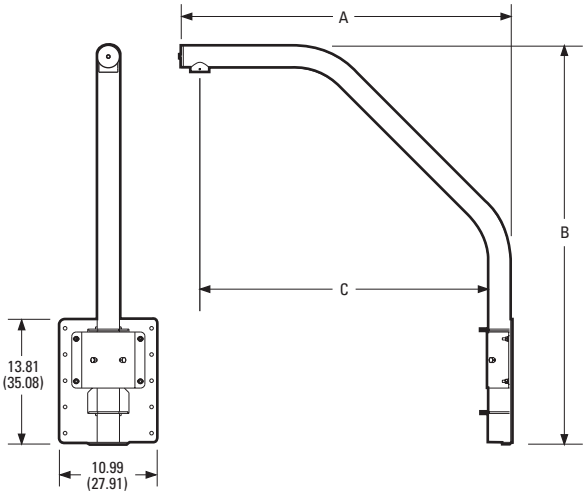


| | A | | B | | C | |
|---|---|---|---|---|---|---|
| PP350 | 25.50 | (64.77) | 35.08 | (89.10) | 20.42 | (51.87) |
| PP450 | 37.66 | (95.65) | 42.00 | (106.68) | 33.00 | (83.82) |

NOTE: VALUES IN PARENTHESES ARE CENTIMETERS; ALL OTHERS ARE INCHES.

# TECHNICAL SPECIFICATIONS

## MODELS

| | |
|---|---|
| PP350 | Parapet or vertical wall mount for small-size pendant domes; mounts to inside or outside of parapet |
| PP351 | Rooftop or smooth horizontal surface mount for small-size pendant domes |
| PP450 | Same as PP350 except overhead clearance and height accommodate medium-size pendant domes |
| PP451 | Same as PP351 except overhead clearance and height accommodate medium-size pendant domes |

## MECHANICAL

| | |
|---|---|
| Positioning Adjustment | 360° |
| Mounting Method | Secure to mounting surface with 3/8-16 type fastening hardware (not supplied). Multiple fastening positions facilitate mounting flexibility.<br>For models PP350 and PP450, mount using a minimum of six fasteners<br>For models PP351 and PP451, mount using a minimum of eight fasteners |
| Dome Mounting | Dome screws directly into mount |

## GENERAL

| | |
|---|---|
| Maximum Load | 45 lb (20.41 kg) approximate |
| Effective Projected Area (EPA) | |
| PP350/PP351 | ~133 square inches |
| PP450/PP451 | ~177 square inches |
| Construction | Aluminum |
| Finish | Gray polyester powder coat |
| Environment | Outdoor |
| Unit Weight | |
| PP350 | 9.30 lb (4.22 kg) |
| PP351 | 20.19 lb (9.16 kg) |
| PP450 | 10.38 lb (4.71 kg) |
| PP451 | 22.53 lb (10.22 kg) |
| Shipping Weight | |
| PP350 | 15 lb (6.80 kg) |
| PP351 | 33 lb (14.95 kg) |
| PP450 | 17 lb (7.70 kg) |
| PP451 | 35 lb (15.85 kg) |

## CERTIFICATIONS/RATINGS

- UL Listed (models PP350 and PP351)

**PP351 PARAPET ROOFTOP MOUNT**

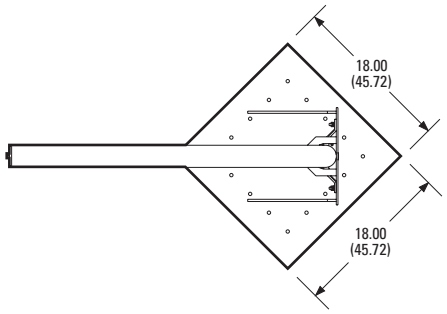


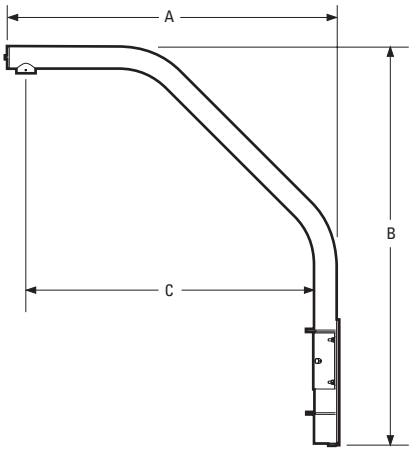


| | A | | B | | C | |
|---|---|---|---|---|---|---|
| PP351 | 25.50 | (64.77) | 35.27 | (89.59) | 20.42 | (51.87) |
| PP451 | 37.66 | (95.65) | 42.19 | (107.16) | 33.00 | (83.82) |

NOTE: VALUES IN PARENTHESES ARE CENTIMETERS; ALL OTHERS ARE INCHES.

⚠ **WARNING:** Cancer and Reproductive Harm - www.P65Warnings.ca.gov.
⚠ **ADVERTENCIA:** Cáncer y Daño Reproductivo - www.P65Warnings.ca.gov.
⚠ **AVERTISSEMENT:** Cancer et Troubles de l'appareil reproducteur - www.P65Warnings.ca.gov.

**Pelco, Inc.**
625 W. Alluvial, Fresno, California 93711 USA
**USA & Canada** Tel: (800) 289-9100 • FAX: (800) 289-9150
**International** Tel: +1 (559) 292-1981 • FAX: +1 (559) 348-1120
**www.pelco.com**

Pelco, the Pelco logo, and Spectra are registered trademarks of Pelco, Inc.
Product specifications and availability subject to change without notice.
©Copyright 2003, Pelco, Inc. All rights reserved.