PELCO™

INSTALLATION

SWM Series Wall Mount

C293M-E (9/13)

Contents

Important Safety Instructions 3

Description 4
Models 4
Parts List 4

Installation 5
Wall Mounting 5
Electrical Box Mounting 7

Specifications 9

Important Safety Instructions

1. Read these instructions.
2. Keep these instructions.
3. Heed all warnings.
4. Follow all instructions.
5. Only use attachments/accessories specified by the manufacturer.
6. Installation should be done only by qualified personnel and conform to all local codes.
7. Use only installation methods and materials capable of supporting four times the maximum specified load.
8. Only use replacement parts recommended by Pelco.
9. Use stainless steel hardware to fasten the mount to outdoor surfaces.
10. To prevent damage from water leakage when installing a mount outdoors on a roof or wall, apply sealant around the bolt holes between the mount and mounting surface.

Description

The SWM Series indoor/outdoor wall mounts are designed primarily for use with Pelco pendant domes including Spectra®, DF5, and Sarix® ID and IE Series. They can also be used with other pendant domes that require a 3.8 cm (1.5-inch) NPT pipe thread for installation. The mount features cable feedthrough that conceals electrical wiring in the pendant component. The sun shield used for outdoor versions of the pendant component (where available) is readily accepted by the mount. Anti-seize lubricant is supplied for application to the pipe threads, and a gasket is affixed to the base to protect the interior from moisture.

The mount can be attached to any vertical load-bearing surface or to either an SWM-PA Series pole adapter or an SWM-CA Series corner mount adapter by means of a mounting cleat.

The wall mount and adapters are constructed of aluminum with a polyester powder coat finish. The wall mount is available in gray, light gray, black, or white. The pole adapter is available in gray, black, or white. The corner adapter is available in gray or white.

For Sarix installations, the SWM Series wall mounts require a Sarix pendant mount adapter: the ID-P is required for Sarix ID Series domes and the IE-P is required for Sarix IE Series domes.

MODELS

SWM-GY	Wall mount with cable feedthrough; gray finish
SWM-BK	Same as SWM-GY except black finish
SWM-SR	Same as SWM-GY except light gray finish
SWM-WT	Same as SWM-GY except white finish

PARTS LIST

Qty	Description
1	Wall mount
1	Mounting cleat
1	Adjustment plate
1	10-24 x 1.59 cm (0.625-inch) set screw (attached)
1	Anti-seize lubricant

The following parts are needed but not supplied:

Qty	Description
2	Mounting fasteners, up to 0.64 cm (0.25-inch) (M6) diameter, appropriate length for attaching the mounting cleat to the wall or adjustment plate
2	Mounting fasteners, up to 0.64 cm (0.25-inch) (M6) diameter, appropriate length for attaching the adjustment plate to an electrical box
1	Pendant component (dome, back box, adapter)

Installation

The SWM can be mounted directly onto a wall, onto a single gang electrical box, or onto the corner of a building or a pole using an adapter. Refer to the SWM-PA Series Pole Adapter Installation manual for pole mounting instructions. Refer to the SWM-CA Series Corner Mount Adapter Installation manual for corner mounting instructions.

WALL MOUNTING

To install the SWM Series wall mount directly onto a wall (refer to Figure 1 on page 6):

1. Determine the location where the mount is to be installed.
2. Use the adjustment plate as a template to drill holes into the mounting surface. If the adjustment plate is not required for shimming, it can be discarded after the mounting holes are drilled.
3. Pull the electrical cables from the cable hole in the mounting surface through the cable holes in the adjustment plate (if required), and then pull them through the mounting cleat.
4. Position the cleat so the elongated mounting fastener hole is below the cable entry hole and the embossed arrow is pointing up.
5. Fasten the adjustment plate (if used) and mounting cleat securely to the mounting surface with two 0.64 cm (0.25-inch) (M6) diameter fasteners of appropriate length (not supplied). If necessary, before tightening the two fasteners, insert shims between the adjustment plate and the mounting surface to create a perpendicular surface on which to attach the wall mount. The lower hole in the mounting cleat is elongated, which allows for vertical alignment adjustment.
6. Pull the electrical cables through the mount.
7. Hook the mount onto the top of the mounting cleat, and position the mount flush against the mounting surface. If necessary, loosen the set screw in the bottom of the mount to make sure the mount is flush against the mounting surface.
8. Tighten the set screw in the bottom of the mount only until the mount is snug against the surface. *Do not overtighten.*

9. Attach the pendant component (dome, back box, or adapter) to the mount:
   a. Pull the electrical cables from the mount into the component.
   b. Apply anti-seize lubricant (supplied) to the component pipe threads.
   c. Screw the component onto the mount.
   d. Complete the installation using the instructions in the component manual.

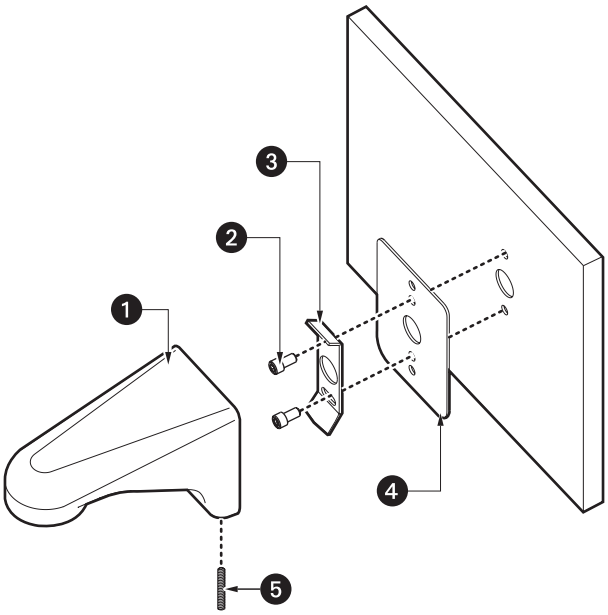

Figure 1. Installing the SWM Series Wall Mount onto a Wall

1. Wall mount
2. Mounting fasteners (not supplied)
3. Mounting cleat
4. Adjustment plate
5. 10-24 x 1.59 cm (0.625-inch) set screw

ELECTRICAL BOX MOUNTING

To install the SWM Series wall mount onto a single gang electrical box (refer to Figure 2 on page 8):

1. Thread the two inner mounting holes on the adjustment plate to be used with threaded mounting fasteners (not supplied).
2. Pull the electrical cables from the gang box through the cable hole in the adjustment plate.
3. Fasten the adjustment plate to the mounting surface with two 0.25-inch (M6) diameter fasteners of appropriate length (not supplied).
4. Pull the electrical cables from the gang box through the cable hole in the mounting cleat.
5. Position the cleat so the elongated mounting fastener hole is below the cable entry hole and the embossed arrow is pointing up.
6. Fasten the mounting cleat to the adjustment plate with two threaded 0.25-inch (M6) diameter fasteners of appropriate length (not supplied).
7. Pull the electrical cables through the mount.
8. Hook the mount onto the top of the mounting cleat, and position the mount flush against the mounting surface. If necessary, loosen the set screw in the bottom of the mount to make sure the mount is flush against the mounting surface.
9. Tighten the set screw in the bottom of the mount only until the mount is snug against the surface. *Do not overtighten.*

10. Attach the pendant component (dome, back box, or adapter) to the mount:
    a. Pull the electrical cables from the mount into the component.
    b. Apply anti-seize lubricant (supplied) to the component pipe threads.
    c. Screw the component onto the mount.
    d. Complete the installation using the instructions in the component manual.

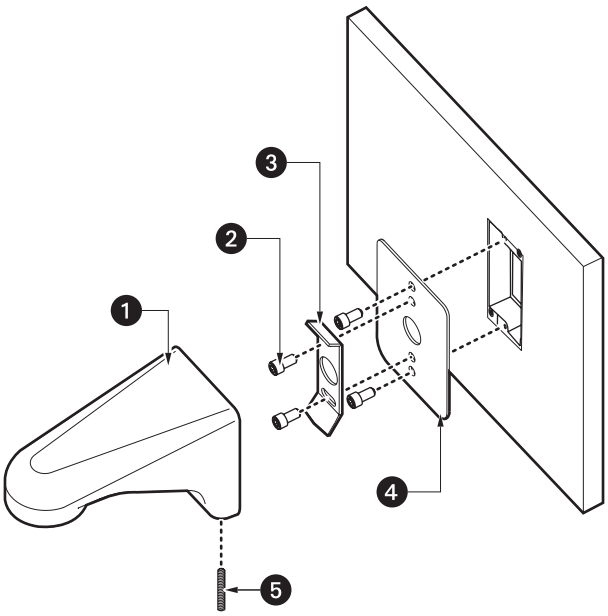

Figure 2. Installing the SWM Series Wall Mount onto an Electrical Box

1. Wall mount
2. Mounting fasteners (not supplied)
3. Mounting cleat
4. Adjustment plate
5. 10-24 x 1.59 cm (0.625-inch) set screw

Specifications

MECHANICAL

Construction	Cast aluminum
Finish	
SWM-GY	Light gray polyester powder coat
SWM-BK	Black polyester powder coat
SWM-SR	Light gray polyester powder coat
SWM-WT	White polyester powder coat
Mount Method	Mount is secured by a set screw to a mounting cleat that is attached to a surface with two fasteners (not supplied). A gasket is affixed to the base to protect the interior from moisture. An adjustment plate is provided to allow the wall mount to be shimmed when the mounting surface is not plumb. The lower hole in the mounting cleat is elongated, which allows for vertical alignment adjustment.
Dome Mounting	3.8 cm (1.5-inch) NPT pipe thread in mount tip. Anti-seize lubricant is supplied for application to the pipe threads.
Cable Entry	One cable feedthrough hole in the mounting cleat. Cable feeds through the mount into the pendant component.
Maximum Load	4.5 kg (10 lb)

GENERAL

Environment	Indoor/outdoor
Dimensions	15.88 x 7.87 x 10.54 cm (6.25" D x 3.10" W x 4.15" H)
Unit Weight	0.50 kg (1.1 lb)

NOTE: VALUES IN PARENTHESES ARE INCHES; ALL OTHERS ARE CENTIMETERS.

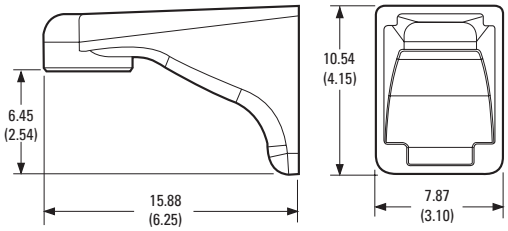

WARRANTY STATEMENT

For information about Pelco's product warranty and thereto related information, refer to *www.pelco.com/warranty*.

This equipment contains electrical or electronic components that must be recycled properly to comply with Directive 2002/96/EC of the European Union regarding the disposal of waste electrical and electronic equipment (WEEE). Contact your local dealer for procedures for recycling this equipment.

REVISION HISTORY

Manual #	Date	Comments
C293M	11/98	Original version.
C293M-A	12/07	Updated to new format. Revised Figure 1 to include additional holes in adjustment plate.
C293M-B	1/09	Reformatted manual to smaller size.
C293M-C	12/09	Added SWM-WT model.
C293M-D	10/10	Added SWM-SR model information and updated the warranty.
C293M-E	9/13	Edited the document to conform with current style guidelines.

Pelco, the Pelco logo, and other trademarks associated with Pelco products referred to in this publication are trademarks of Pelco, Inc. or its affiliates.
ONVIF and the ONVIF logo are trademarks of ONVIF Inc. All other product names and services are the property of their respective companies.
Product specifications and availability are subject to change without notice.

© Copyright 2013, Pelco, Inc.
All rights reserved.

Pelco, Inc. 625 W. Alluvial Ave., Fresno, CA 93711 United States
USA & Canada Tel (800) 289-9100 Fax (800) 289-9150
International Tel +1 (559) 292-1981 Fax +1 (559) 348-1120
www.pelco.com